Good Display Specifications

Type: Standard
Model No. GTI050NA-08C

`

Prepared: Shouyang Zhao
Checked: Dong Wei
Approved: Jinggang Zhao
Issue Date: 10/10/2010

Good Display

Dalian Good Display Co., Ltd.

No.17 Gonghua Street, Shahekou District, Dalian 116021 China
Tel: +86-411-84619565 Fax: +86-411-84619585
E-mail: info@good-lcd.com.cn
Website: www.good-display.com

Record of Revision

Version	Revise Date	Page	Content
Pre-Spec.01	2013/04/24	All	Initial Release

Contents

1. General Specifications 1
2. Pin Assignment 2
3. Operation Specifications 4
3.1. Electrical Absolute Maximum Ratings 4
3.2. Typical Operation Conditions 5
3.2.1. Typical Operation Conditions 5
3.2.2 Current Consumption 6
3.2.3 Backlight Driving Conditions 6
3.3. Power Sequence 7
3.4. Timing Characteristics 8
3.4.1. Timing Conditions 8
3.4.2. Timing Diagram 10
4. Optical Specification 13
5. Reliability Test 17
6. General Precautions 18
6.1. Safety 18
6.2. Handling 18
6.3. Static Electricity 18
6.4. Storage 18
6.5. Cleaning 18
7. Mechanical Drawing 19
8. Package Drawing 20
8.1. Packaging Material Table 20
8.2. Packaging Quantity 20
8. 3.Package Drawing 21

1. General Specifications

No.	Item	Specification	Remark
1	LCD size	5.0 inch(Diagonal)	
2	Driver element	a-Si TFT active matrix	
3	Resolution	640 ×(RGB) × 480	
4	Display mode	Normally White, Transmissive	
5	Dot pitch	0.053(W) × 0.159(H) mm	
6	Active area	101.57(W) × 76.18(H) mm	
7	Module size	117.65(W) × 88.43(H) × 5.70(D) mm	Note 1
8	Surface treatment	Anti-Glare	
9	Color arrangement	RGB-stripe	
10	Interface	Digital	
11	Backlight Power consumption	0.960W (Typ.)	
12	Panel Power consumption	TBD	
13	Weight	TBD	

Note 1: Refer to Mechanical Drawing.

2. Pin Assignment

TTL connector is used for the module electronics interface. The recommended model is FH12S-50S-0.5SH manufactured by HiRose.

Pin No.	Symbol	I/O	Function	Remark
1	V_{LED+}	P	Power for LED Circuit	
2	V_{LED+}	P	Power for LED Circuit	
3	V_{LED-}	P	Power for LED Circuit	
4	V_{LED-}	P	Power for LED Circuit	
5	GND	P	Power ground	
6	V_{COM}	I	V_{COM} input	
7	DV_{DD}	P	Power for Digital Circuit	
8	MODE	I	DE or HV mode control	Note1
9	DE	I	Data Enable	
10	VS	I	Vsync signal input	
11	HS	I	Hsync signal input	
12	B7	I	Blue data input (MSB)	
13	B6	I	Blue data input	
14	B5	I	Blue data input	
15	B4	I	Blue data input	
16	B3	I	Blue data input	
17	B2	I	Blue data input	
18	B1	I	Blue data input	
19	B0	I	Blue data input(LSB)	
20	G7	I	Green data input(MSB)	
21	G6	I	Green data input	
22	G5	I	Green data input	
23	G4	I	Green data input	
24	G3	I	Green data input	
25	G2	I	Green data input	
26	G1	I	Green data input	
27	G0	I	Green data input(LSB)	
28	R7	I	Red data input(MSB)	
29	R6	I	Red data input	
30	R5	I	Red data input	
31	R4	I	Red data input	
32	R3	I	Red data input	
33	R2	I	Red data input	
34	R1	I	Red data input	

35	R0	I	Red data input(LSB)	
36	GND	P	Power ground	
37	DCLK	I	Sample clock	
38	GND	P	Power ground	
39	L/R	I	Select left to right scanning direction	Note2
40	U/D	I	Select up or down scanning direction	Note2
41	VGH	I	Positive power for scan driver	
42	VGL	I	Negative power for scan driver	
43	AV_{DD}	P	Power for Analog Circuit	
44	RESET	I	Reset	
45	NC	-	No Connector	
46	V_{COM}	I	V_{COM} input	
47	NC	-	No Connector	
48	NC	-	No Connector	
49	NC	-	No Connector	
50	NC	-	No Connector	

Note: I: input, O: output, P: Power
Note 1: DE Mode, Mode="H",HS floating and VS floating
HV Mode, Mode="L" and DE floating
Note2: Selection of scanning mode

Setting of scan control input		Scanning direction
U/D	L/R	
DV_{DD}	DV_{DD}	Up to down, left to right
GND	DV_{DD}	Down to up, left to right
DV_{DD}	GND	Up to down, right to left
GND	GND	Down to up, right to left

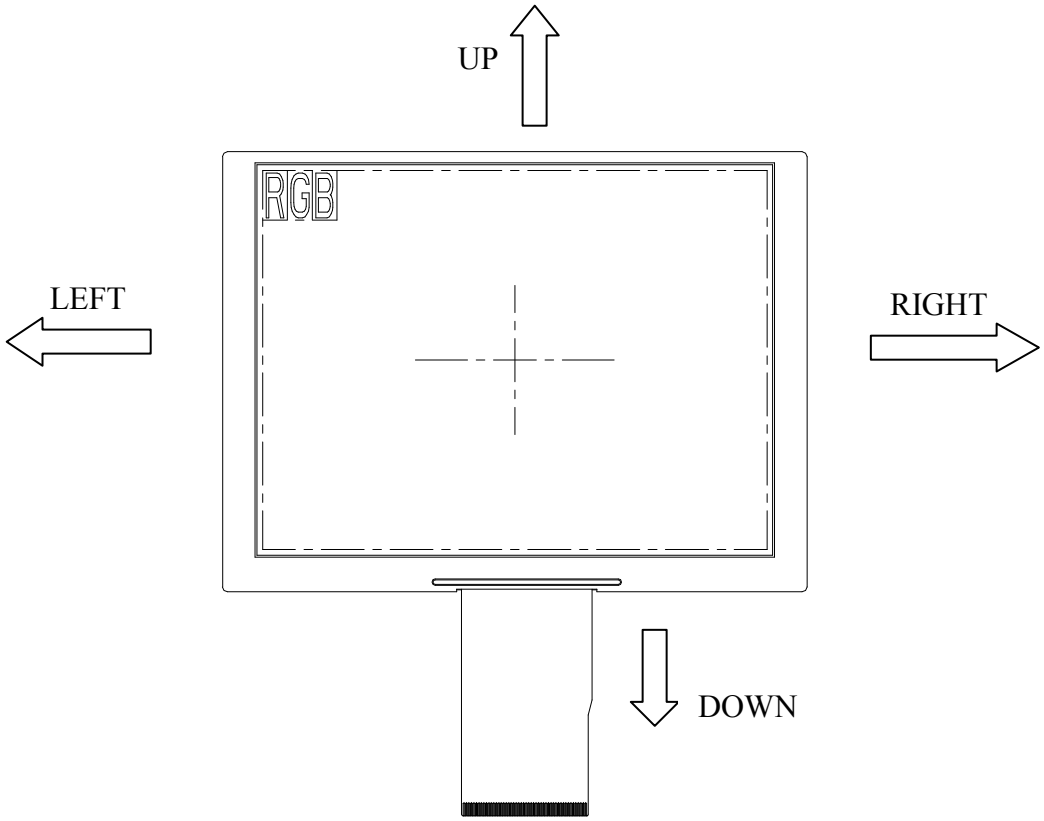

3. Operation Specifications

3.1. Electrical Absolute Maximum Ratings

(GND =0V, Note 1)

Item	Symbol	Values		Unit	Remark
		Min.	Max.		
Power voltage	DV_{DD}	-0.3	5	V	
	AV_{DD}	6.5	13.5	V	
	V_{GH}	-0.3	42	V	
	V_{GL}	-20	0.3	V	
	V_{GH}-V_{GL}	-	40	V	
Operation Temperature	T_{OP}	-20	70	℃	
Storage Temperature	T_{ST}	-30	80	℃	
LED Reverse Voltage	Vr	-	TBD	V	Each LED
LED Forward Current	I_f	-	TBD	mA	Each LED

Note 1: Device is subject to be damaged permanently if stresses beyond those absolute maximum ratings listed above.
Note 2: Vr conditions: Zener Diode 120mA.

3.2. Typical Operation Conditions

3.2.1. Typical Operation Conditions

(GND =0V, Note 2)

Item	Symbol	Values			Unit	Remark
		Min.	Typ.	Max.		
Power voltage	DV_{DD}	3.0	3.3	3.6	V	
	AV_{DD}	10.2	10.4	10.6	V	
	V_{GH}	16.7	17.0	17.3	V	
	V_{GL}	-7.3	-7.0	-6.7	V	
Input signal voltage	V_{COM}	3.2	3.5	3.8	V	Note 1
Input logic high voltage	V_{IH}	$0.7DV_{DD}$	-	DV_{DD}	V	
Input logic low voltage	V_{IL}	0	-	$0.3DV_{DD}$	V	

Note 1: Typical Vcom is only a reference value, it must be optimized according to each LCM, please use VR and base on below application circuit.
Note 2: Be sure to apply GND, DV_{DD}, and V_{GL}, to the LCD first, and then apply V_{GH}.

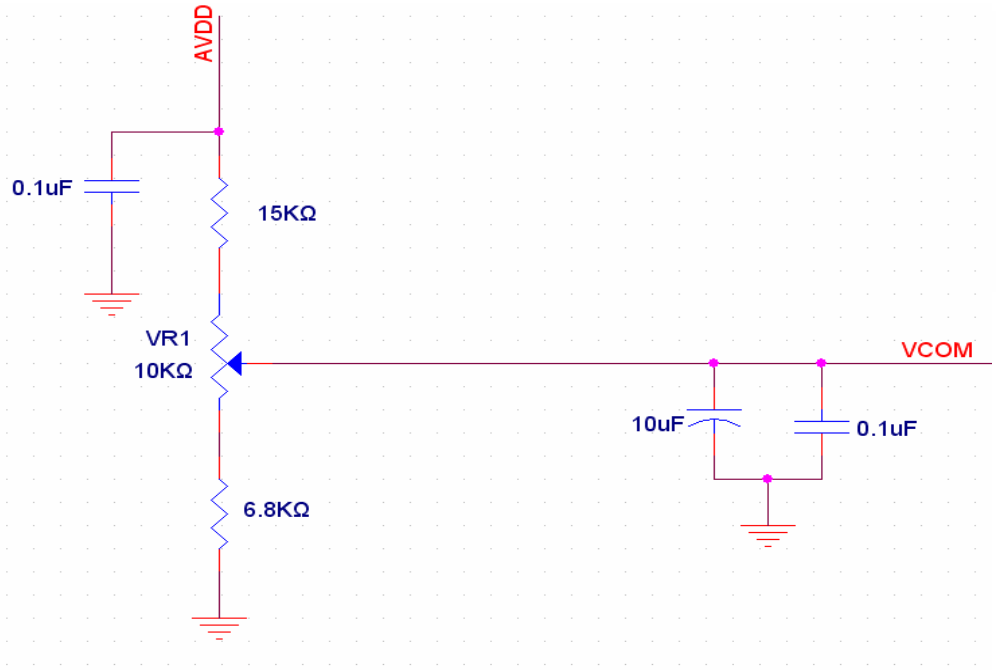

3.2.2 Current Consumption

(GND =0V)

Item	Symbol	Values			Unit	Remark
		Min.	Typ.	Max.		
Current for Driver	I_{GH}	-	TBD	-	uA	V_{GH} =+17V
	I_{GL}	-	TBD	-	uA	V_{GL} = -7V
	I_{CC}	-	TBD	-	mA	DV_{DD} =3.3V
	I_{DD}	-	TBD	-	mA	AV_{DD} =10.4V

3.2.3 Backlight Driving Conditions

Item	Symbol	Values			Unit	Remark
		Min.	Typ.	Max.		
Voltage for LED Backlight	V_L	14.6	15.5	16.4	V	Note 1
Current for LED Backlight	I_L	TBD	60	TBD	mA	
LED life time	-	15,000	-	-	Hr	Note 2

Note 1: The Voltage for LED Backlight is defined at Ta=25℃ and I_L =60mA.

Note 2: The “LED life time” is defined as the module brightness decrease to 50% original brightness that the ambient temperature is 25℃ and I_L =60mA. The LED lifetime could be decreased if operating I_L is lager than 60mA.

3.3. Power Sequence

1. Power on:

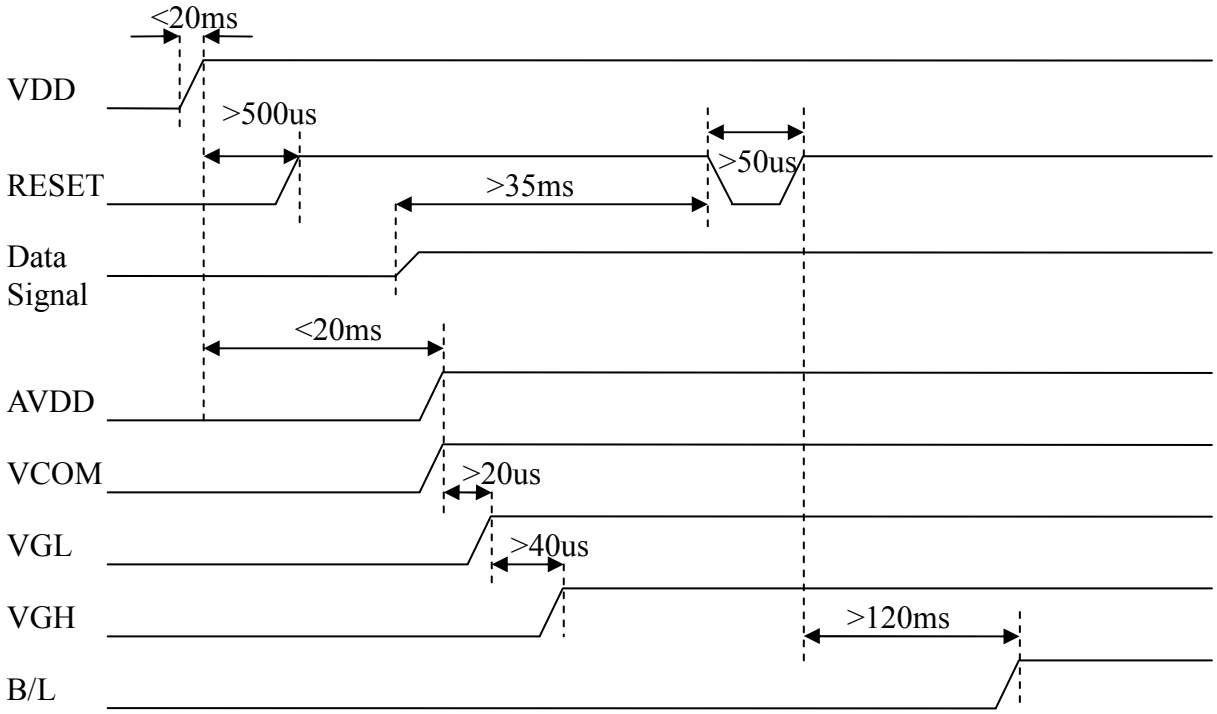

2. Power off:

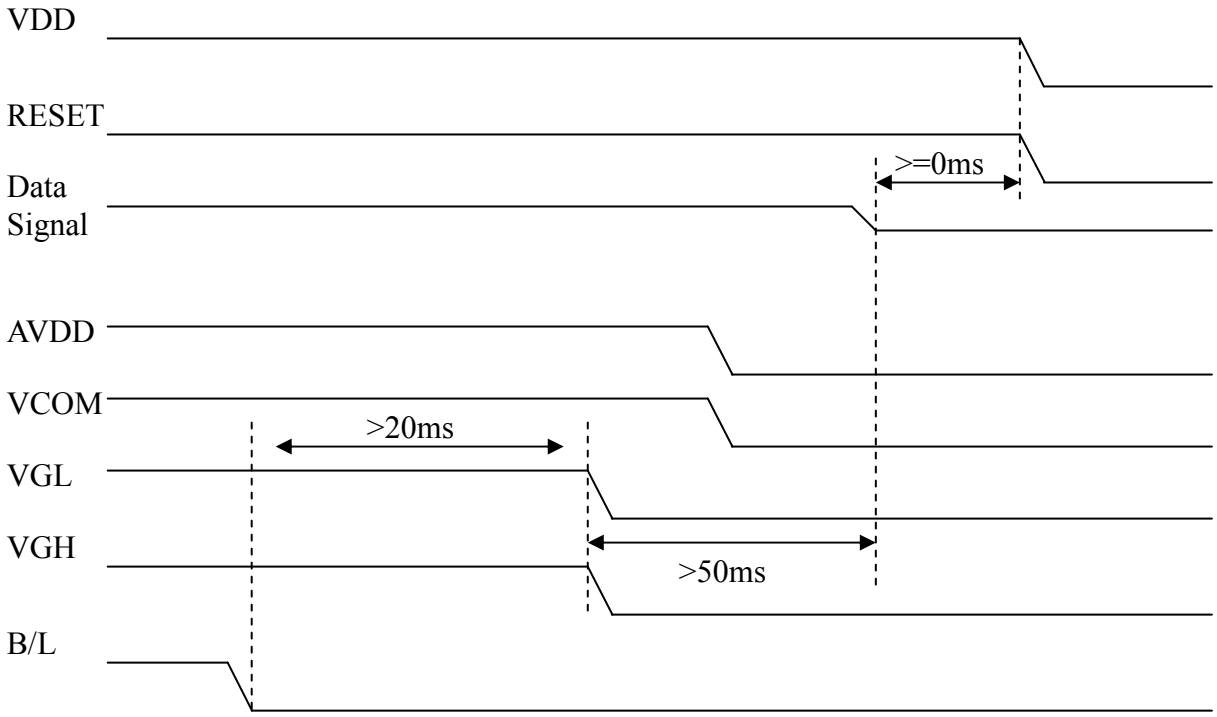

Note:Data includes DE, VS ,HS,B0~B7,G0~G7,R0~R7,DCLK.

3.4. Timing Characteristics

3.4.1. Timing Conditions

Input/Output Timing

Item	Symbol	Values			Unit.	Remark
		Min.	Typ.	Max.		
PXLCLK clock time	Tclk	12.3	13.5	-	ns	1 Tclk
PXLCLK pulse duty	Tcwh	40	50	60	%	Tclk
DATA set-up time	Tdsu	5	-	-	ns	DATA to PXLCLK
DATA hold time	Tdhd	5	-	-	ns	DATA to PXLCLK
DE setup time	Tesu	5	-	-	ns	DE to PXLCLK
VSYNC setup time	Tvst	5	-	-	ns	
VSYNC hold time	Tvhd	5	-	-	ns	
HSYNC setup time	Thst	5	-	-	ns	
HSYNC hold time	Thhd	5	-	-	ns	
HSYNC period time	Th	22.91	-	-	us	
HSYNC width	Thwh	1	-	-	Tclk	
VSYNC width	Tvwh	1	-	-	Th	

Input Timing Limitation of DE Mode

DE Mode	Values			Unit	Remark
	Min.	Typ.	Max.		
THC	40	160	480	tclk	
THD	640	640	640	tclk	
TH	680	800	1100	tclk	1TH=1line
TVC	5	45	220	Line	
TVD	480	480	480	line	
TV	485	525	700	line	1TV=1field

Input Timing Limitation of HV Mode

HV Mode	Values			Unit	Remark
	Min.	Typ.	Max.		
Thwh	-	4	-	tclk	
Thbp	-	42	-	tclk	
Thfp	-	114	-	tclk	
THD	-	640	-	tclk	
TH	-	800	-	tclk	
Tvwh	-	3	-	line	
Tvbp	-	31	-	line	
Tvfp	-	11	-	line	
TVD	-	480	-	line	
TV	-	525	-	line	1TV=1field

3.4.2. Timing Diagram

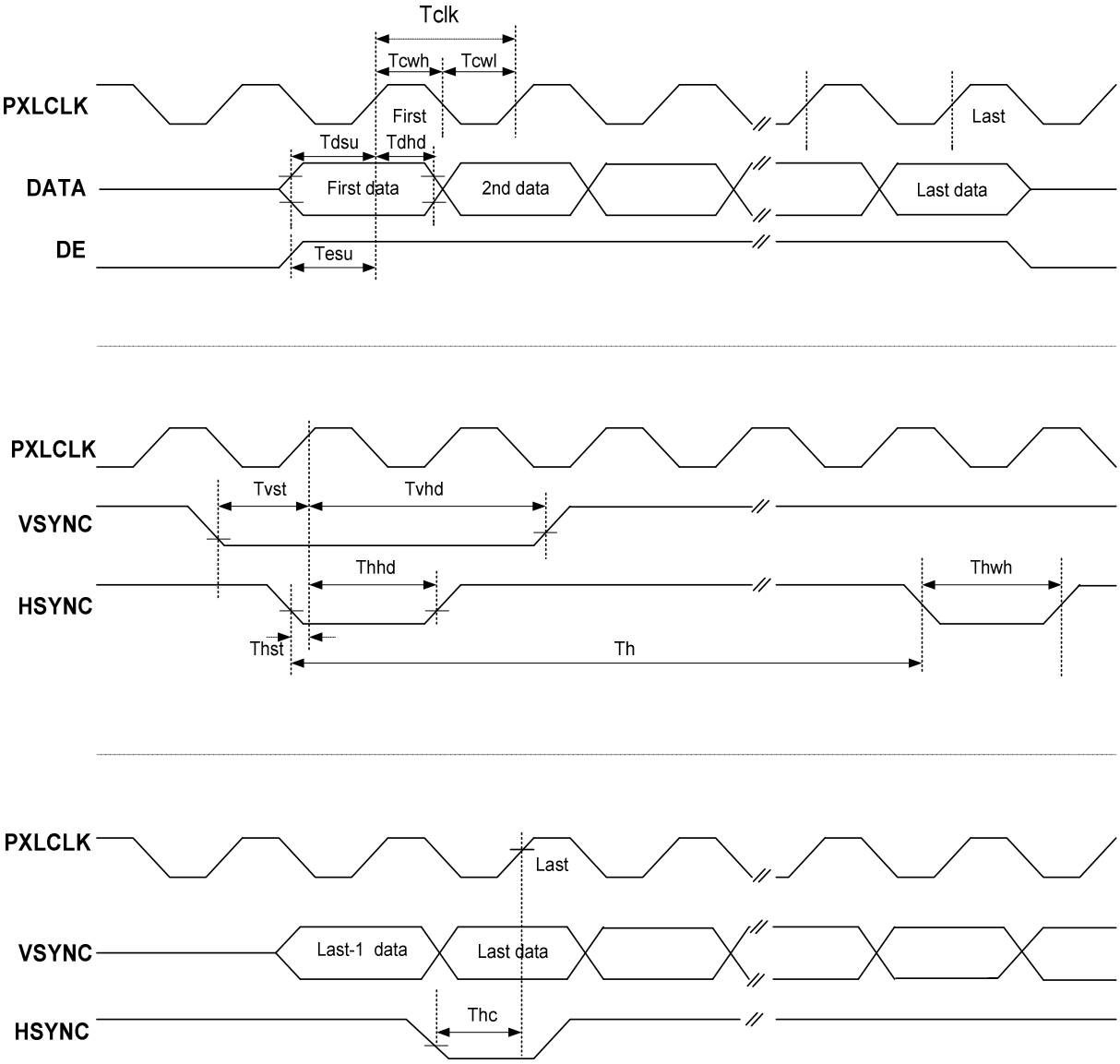

Fig.3-1 Clock and Data Input Timing Diagram

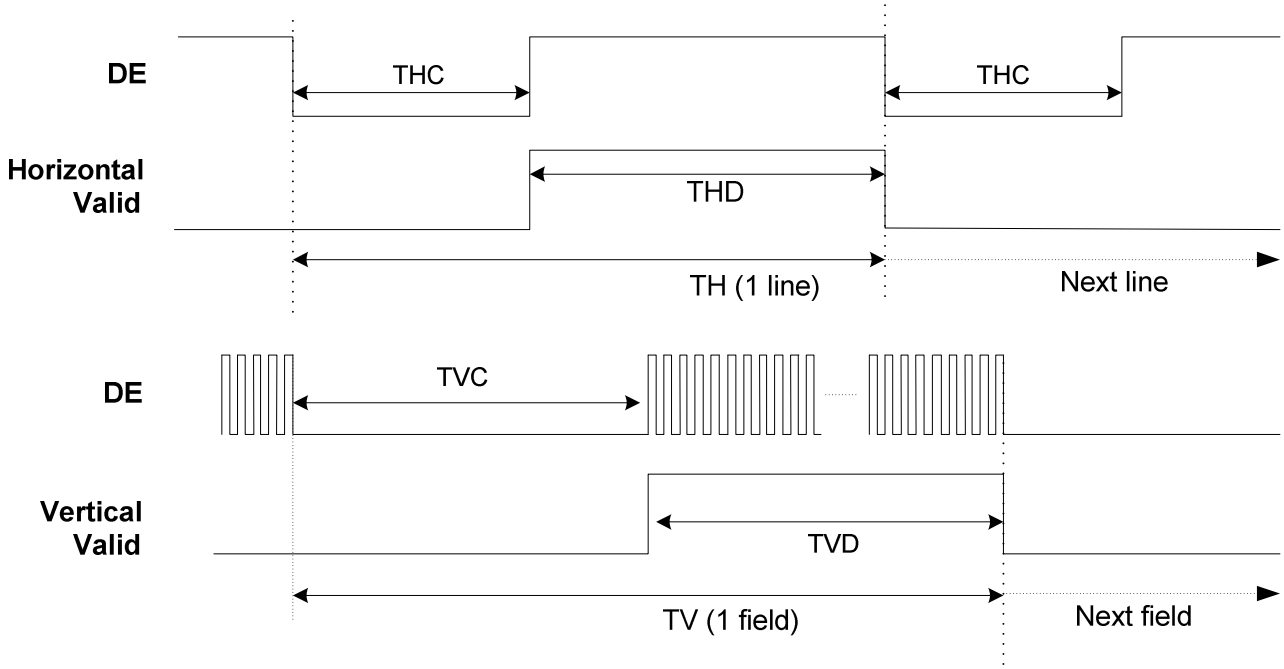

Fig.3-2 DE Mode Input Timing

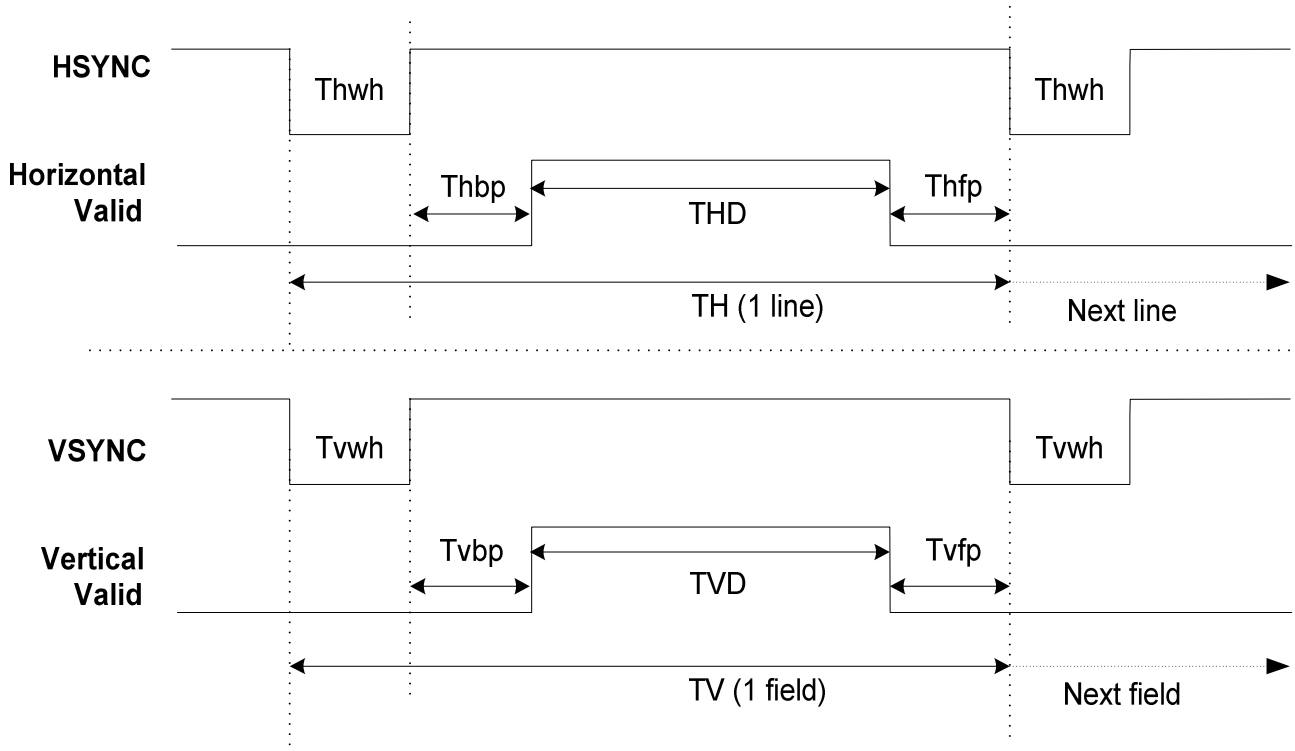

Fig.3-3 HV Mode Input Timing

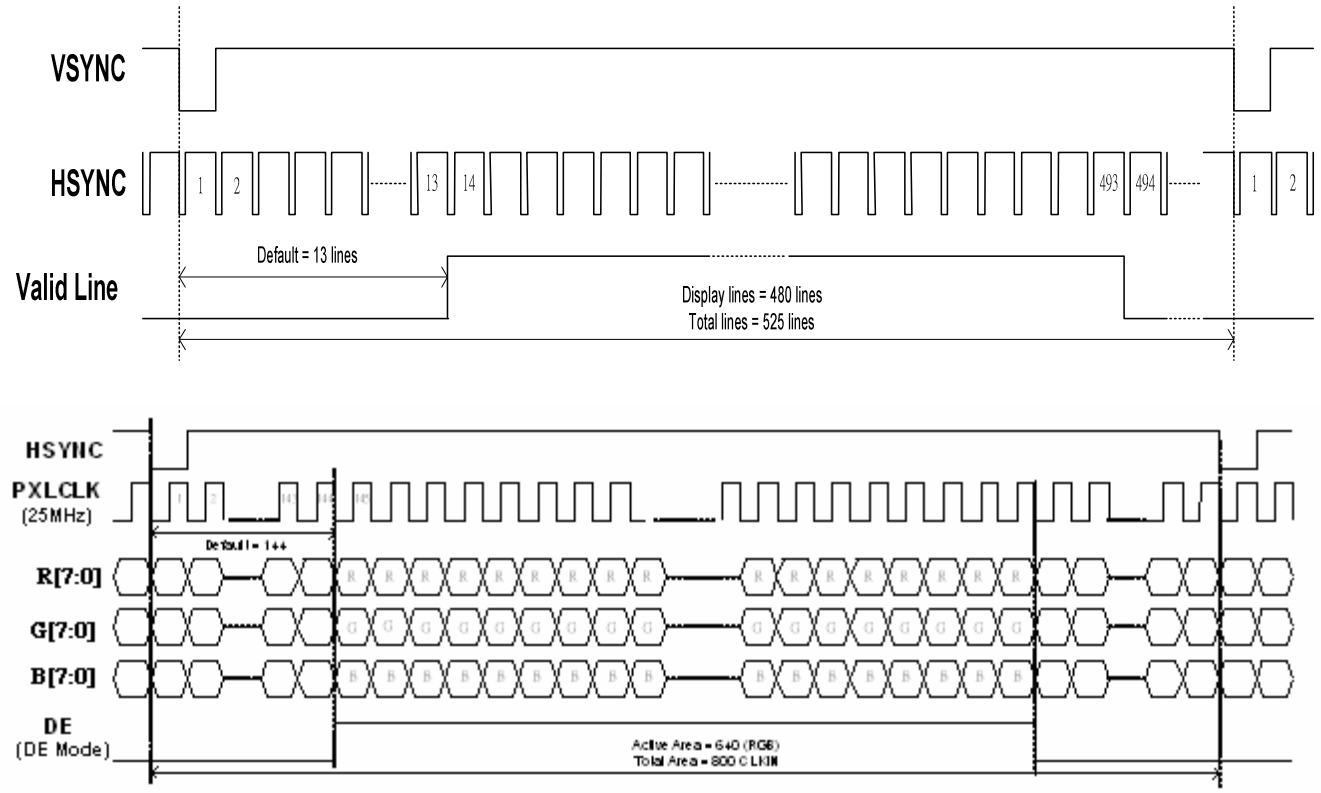

Fig. 3-4 24 bit RGB mode for 640 x (RGB) x 480

4. Optical Specification

Item	Symbol	Condition	Values			Unit	Remark
			Min.	Typ.	Max.		
Viewing angle (CR≥10)	θ_L	Φ=180°(9o'clock)	60	70	-	degree	Note 1
	θ_R	Φ=0°(3 o'clock)	60	70	-		
	θ_T	Φ=90°(12 o'clock)	40	50	-		
	θ_B	Φ=270°(6 o'clock)	60	70	-		
Response time	T_{ON}	Normal θ=Φ=0°	-	10	20	msec	Note 3
	T_{OFF}		-	15	30	msec	Note 3
Contrast ratio	CR		400	500	-	-	Note 4
Color chromaticity	W_X		0.26	0.31	0.36	-	Note 2 Note 5 Note 6
	W_Y		0.28	0.33	0.38	-	
Luminance	L		200	250	-	cd/m^2	Note 6
Luminance uniformity	Y_U		70	75	-	%	Note6,7

Test Conditions:

1. DV_{DD}=3.3V, I_L=60mA,the ambient temperature is 25℃.
2. The test systems refer to Note 2.

Note 1: Definition of viewing angle range

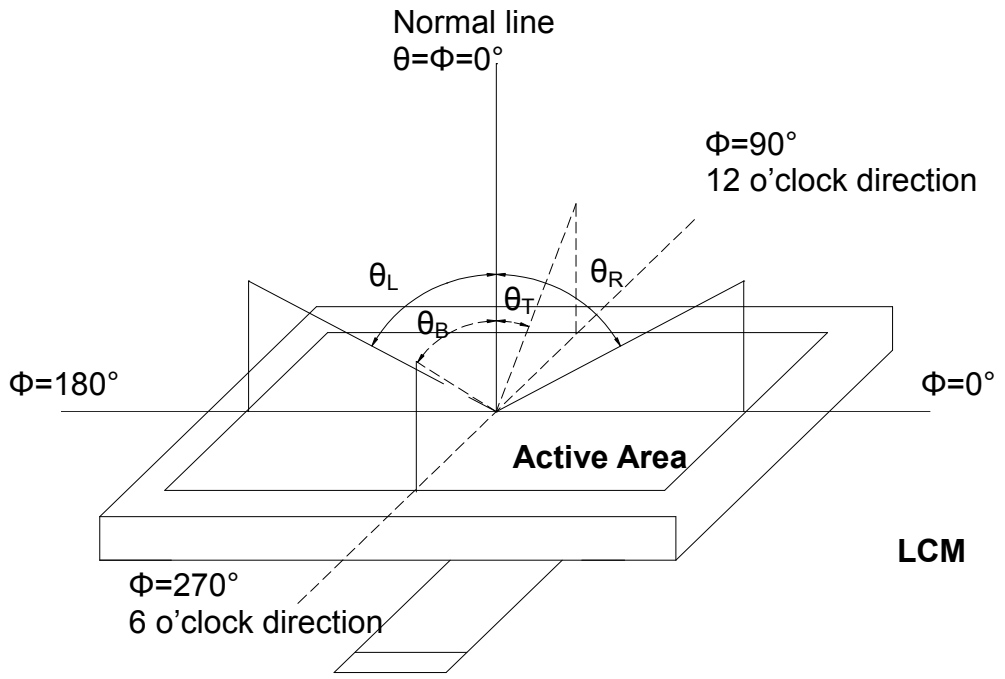

Fig. 4-1 Definition of viewing angle

Note 2: Definition of optical measurement system.

The optical characteristics should be measured in dark room. The optical properties are measured at the center point of the LCD screen. (Response time is measured by Photo detector TOPCON BM-7, other items are measured by BM-5A/Field of view: 1° /Height: 500mm.)

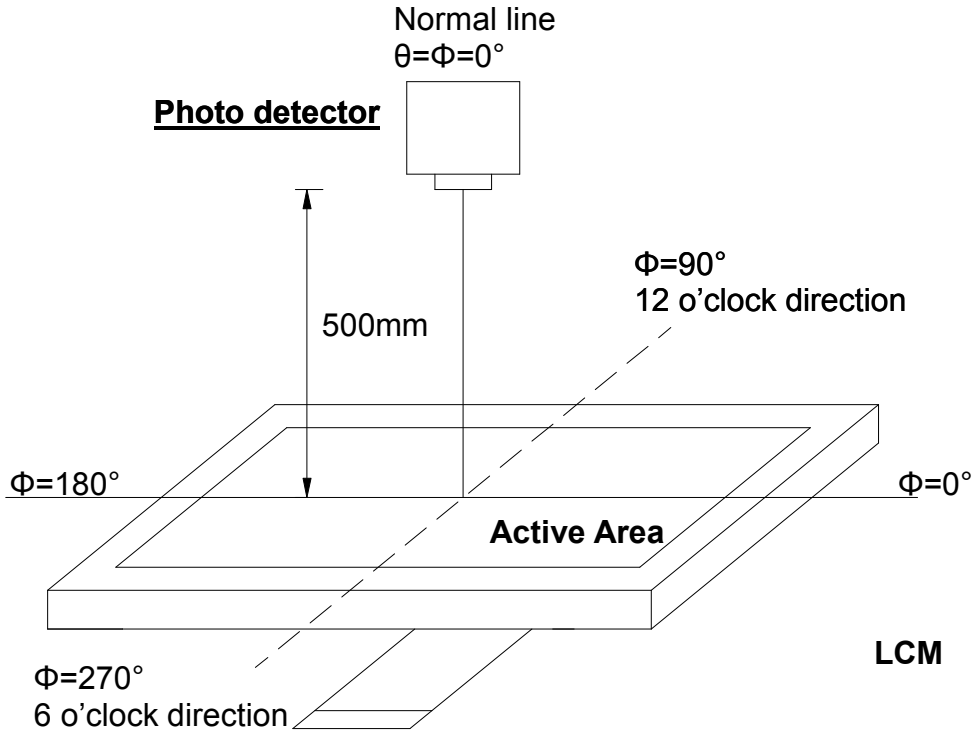

Fig. 4-2 Optical measurement system setup

Note 3: Definition of Response time

The response time is defined as the LCD optical switching time interval between "White" state and "Black" state. Rise time (T_{ON}) is the time between photo detector output intensity changed from 90% to 10%. And fall time (T_{OFF}) is the time between photo detector output intensity changed from 10% to 90%.

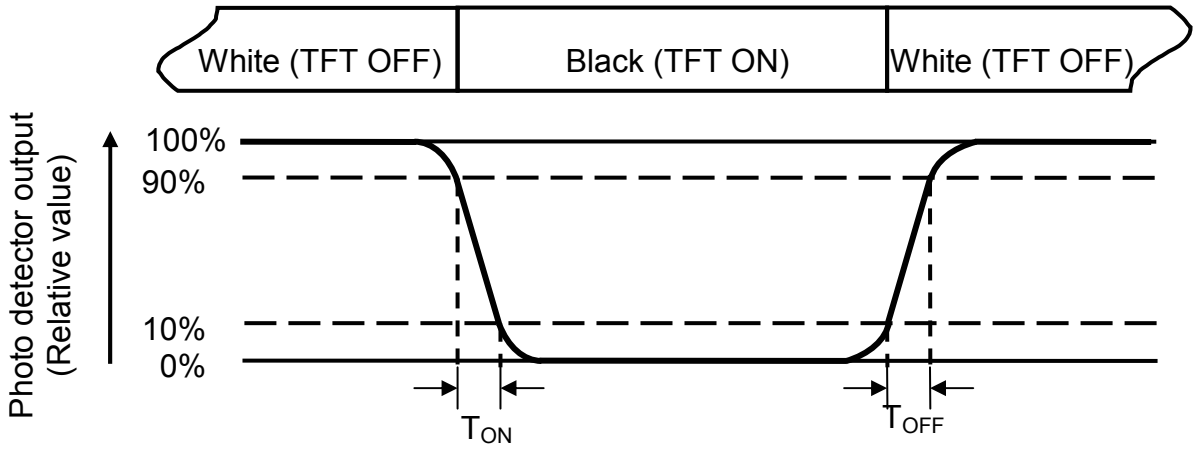

Fig. 4-3 Definition of response time

Note 4: Definition of contrast ratio

$$\text{Contrast ratio (CR)} = \frac{\text{Luminance measured when LCD on the "White" state}}{\text{Luminance measured when LCD on the "Black" state}}$$

Note 5: Definition of color chromaticity (CIE1931)

Color coordinates measured at center point of LCD.

Note 6: All input terminals LCD panel must be ground while measuring the center area of the panel. The LED driving condition is I_L=60mA,

Note 7: Definition of Luminance Uniformity

Active area is divided into 9 measuring areas (Refer to Fig. 4-4).Every measuring point is placed at the center of each measuring area.

$$Luminance\ \ Uniformity\ (Yu) = \frac{B_{min}}{B_{max}}$$

L-------Active area length W----- Active area width

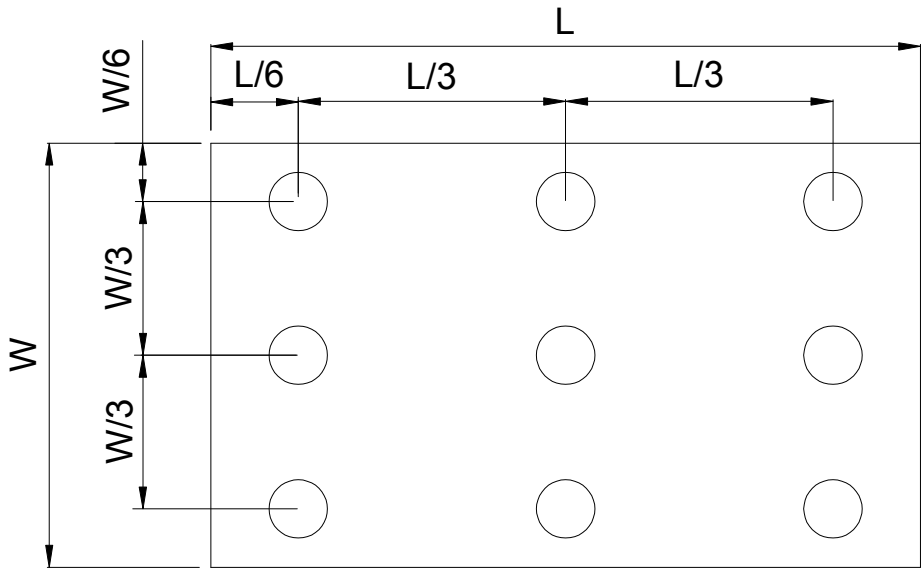

Fig. 4-4 Definition of measuring points

B_{max}: The measured maximum luminance of all measurement position.
B_{min}: The measured minimum luminance of all measurement position.

5. Reliability Test

(Note3)

Item	Test Conditions	Remark
High Temperature Storage	Ta = 80℃ 240 hrs	Note 1, 4
Low Temperature Storage	Ta = -30℃ 240hrs	Note 1, 4
High Temperature Operation	Ts = 70℃ 240hrs	Note 2, 4
Low Temperature Operation	Ta = -20℃ 240hrs	Note 1, 4
Operate at High Temperature and Humidity	+40℃, 90%RH 240 hrs	Note 4
Thermal Shock	-20℃/30 min ~ +70℃/30 min for a total 100 cycles, Start with cold temperature and end with high temperature	Note 4
Vibration Test	Frequency range:10~55Hz Stroke:1.5mm Sweep:10Hz~55Hz~10Hz 2 hours for each direction of X. Y. Z. (6 hours for total)	
Mechanical Shock	100G 6ms,±X, ±Y, ±Z 3 times for each direction	
Package Vibration Test	Random Vibration : 0.015G*G/Hz from 5-200HZ, -6dB/Octave from 200-500HZ 2 hours for each direction of X. Y. Z. (6 hours for total)	
Package Drop Test	Height:60 cm 1 corner, 3 edges, 6 surfaces	
Electro Static Discharge	± 2KV, Human Body Mode, 100pF/1500Ω	

Note 1: Ta is the ambient temperature of samples.
Note 2: Ts is the temperature of panel's surface.
Note 3: In the standard condition, there shall be no practical problem that may affect the display function. After the reliability test, the product only guarantees operation, but doesn't guarantee all the cosmetic specification.
Note 4: Before cosmetic and function tests , the product must have enough recovery time, at least 2 hours at room temperature.

6. General Precautions

6.1. Safety

Liquid crystal is poisonous. Do not put it in your mouth. If liquid crystal touches your skin or clothes, wash it off immediately by using soap and water.

6.2. Handling

1. The LCD panel is plate glass. Do not subject the panel to mechanical shock or to excessive force on its surface.
2. The polarizer attached to the display is easily damaged. Please handle it carefully to avoid scratch or other damages.
3. To avoid contamination on the display surface, do not touch the module surface with bare hands.
4. Keep a space so that the LCD panels do not touch other components.
5. Put cover board such as acrylic board on the surface of LCD panel to protect panel from damages.
6. Transparent electrodes may be disconnected if you use the LCD panel under environmental conditions where the condensation of dew occurs.
7. Do not leave module in direct sunlight to avoid malfunction of the ICs.

6.3. Static Electricity

1. Be sure to ground module before turning on power or operating module.
2. Do not apply voltage which exceeds the absolute maximum rating value.

6.4. Storage

1. Store the module in a dark room where must keep at 25±10℃ and 65%RH or less.
2. Do not store the module in surroundings containing organic solvent or corrosive gas.
3. Store the module in an anti-electrostatic container or bag.

6.5. Cleaning

1. Do not wipe the polarizer with dry cloth. It might cause scratch.
2. Only use a soft sloth with IPA to wipe the polarizer, other chemicals might permanent damage to the polarizer.

7. Mechanical Drawing

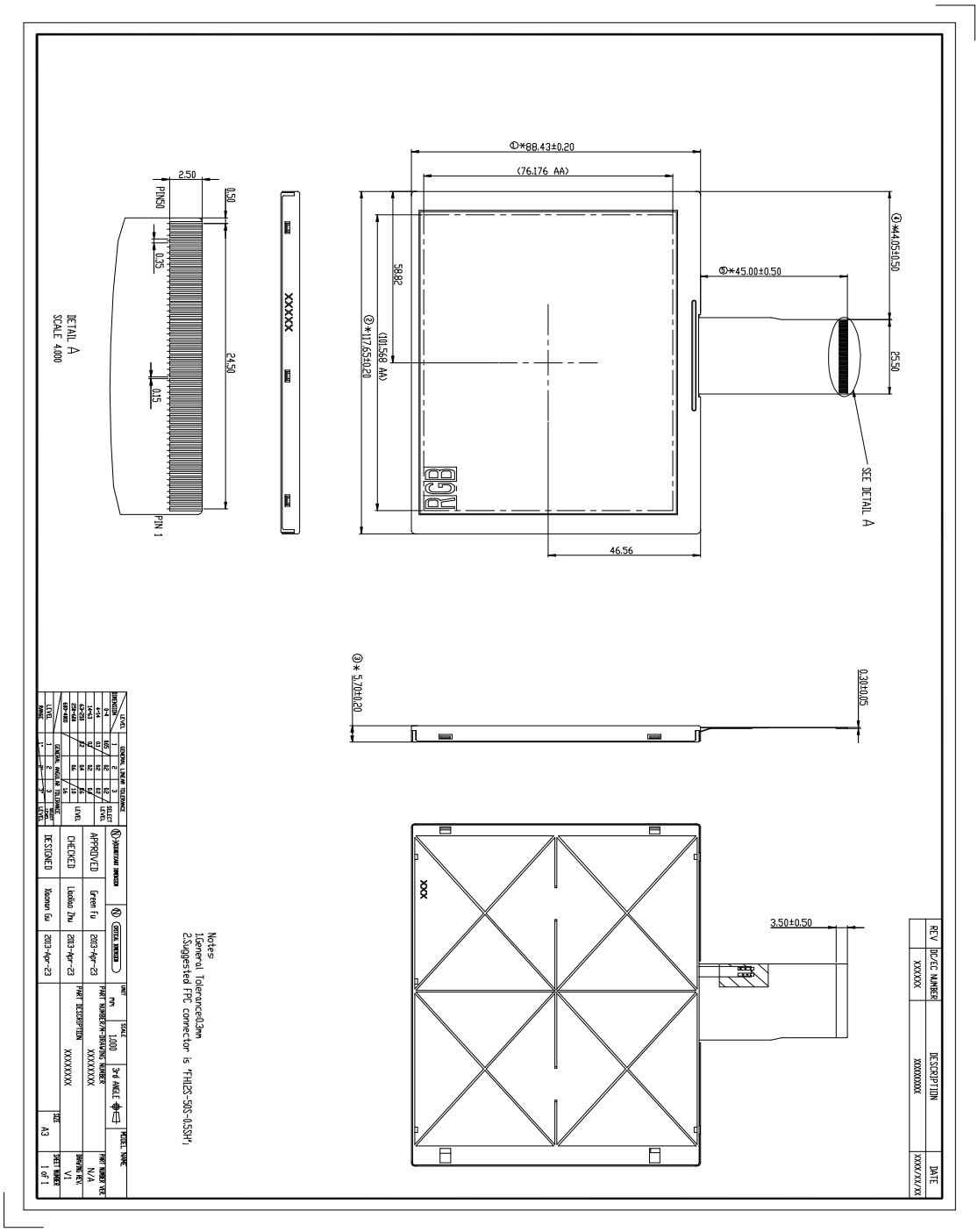

8. Package Drawing

8.1. Packaging Material Table

No.	Item	Model (Material)	Dimensions(mm)	Unit Weight (kg)	Quantity	Remark
1	LCM Module	GTI050NA-08C	117.65 × 88.43 × 5.7	TBD	60pcs	
2	Partition	B Corrugated paper	512 × 349 × 226	1.050	1set	
3	Corrugated Bar	B Corrugated paper	349 × 198 × 49	0.098	2set	
4	Corrugated Board	B Corrugated paper	512 × 349	0.040	8pcs	
5	Dust-Proof Bag	PE	700 × 530	0.060	1pcs	
6	A/S Bag	PE	180 × 133 × 0.2	0.001	60pcs	
7	Carton	Corrugated paper	530 × 355 × 255	0.82	1pcs	
8	Total Weight	TBD kg ± 5%				

8.2. Packaging Quantity

Total LCM quantity in Carton: no. of Partition 4 Rows x quantity per Row 15= 60
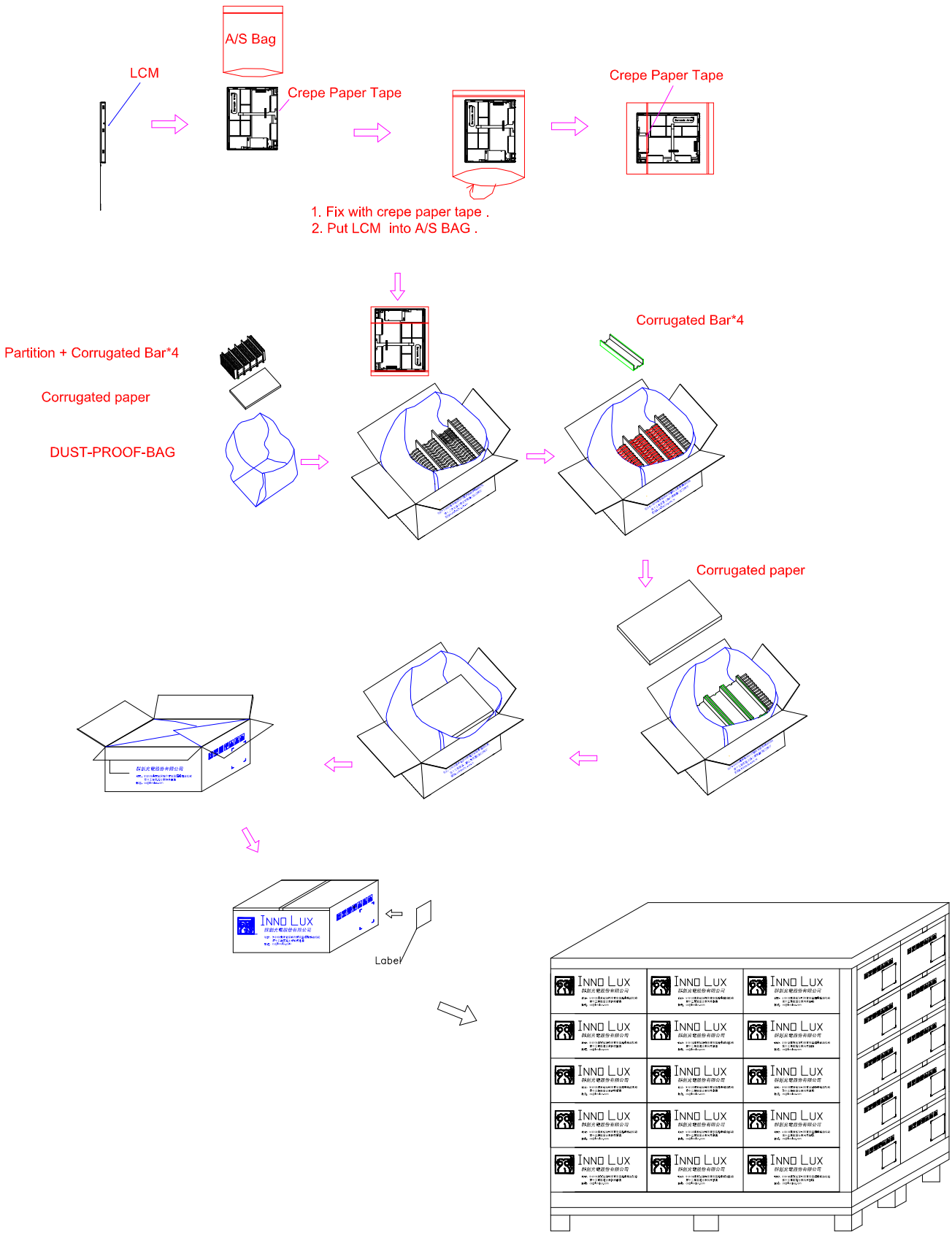
8. 3.Package Drawing